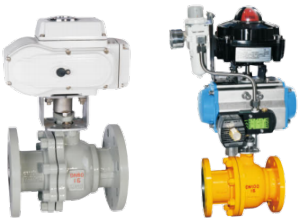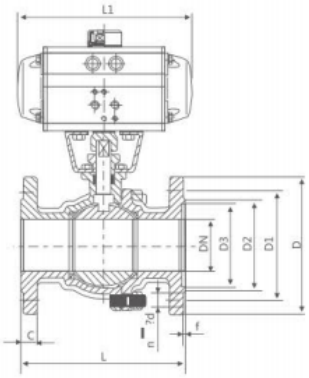Electric ball valve