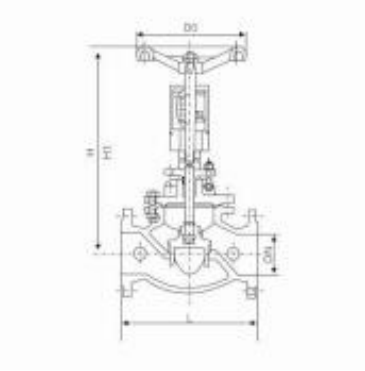# KBF balance valve